Anvil Reception Counter

Installation Guide

TOOLS REQUIRED: Powered screwdriver

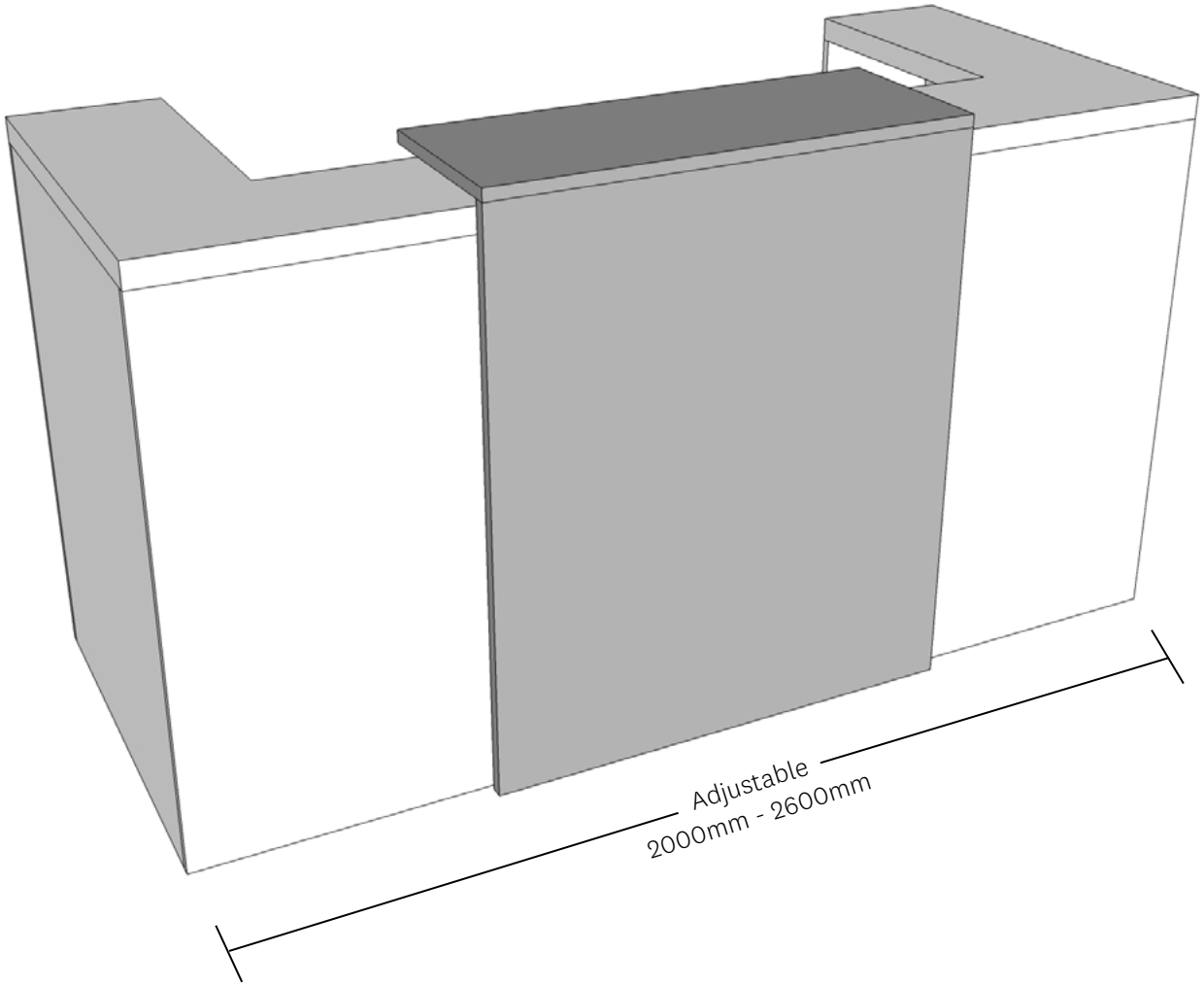

ANVIL RECEPTION COUNTER

Installation Guide

PARTS

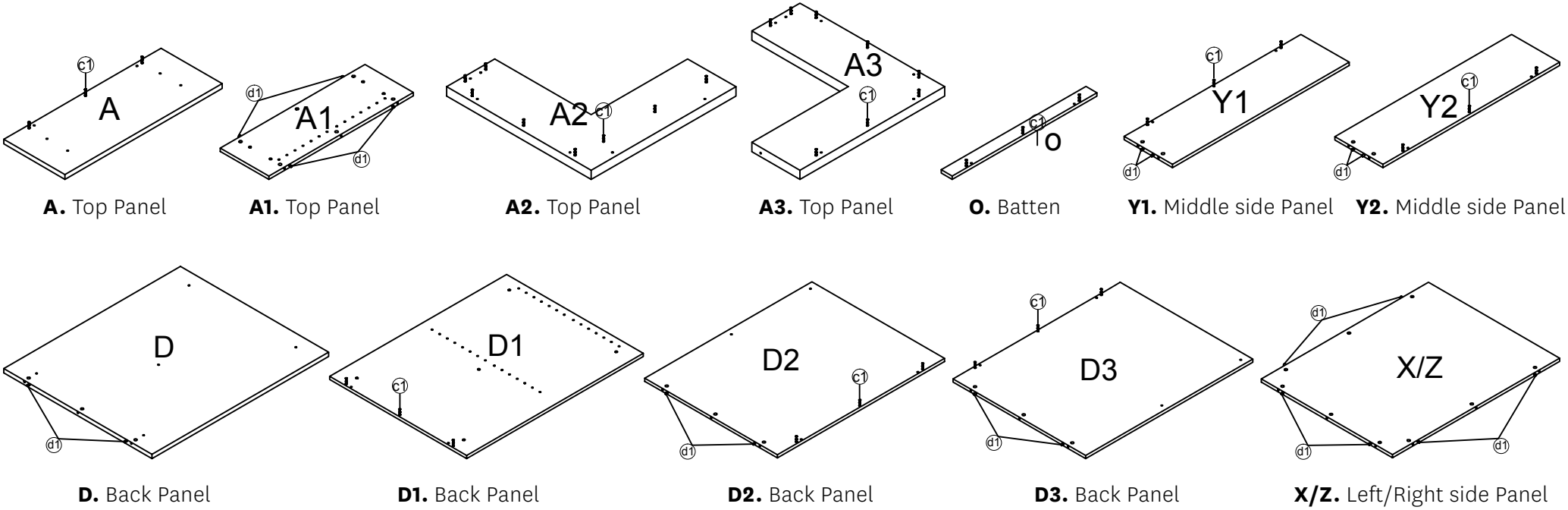

A. Top Panel **A1.** Top Panel **A2.** Top Panel **A3.** Top Panel **O.** Batten **Y1.** Middle side Panel **Y2.** Middle side Panel

D. Back Panel **D1.** Back Panel **D2.** Back Panel **D3.** Back Panel **X/Z.** Left/Right side Panel

Pre-installed parts

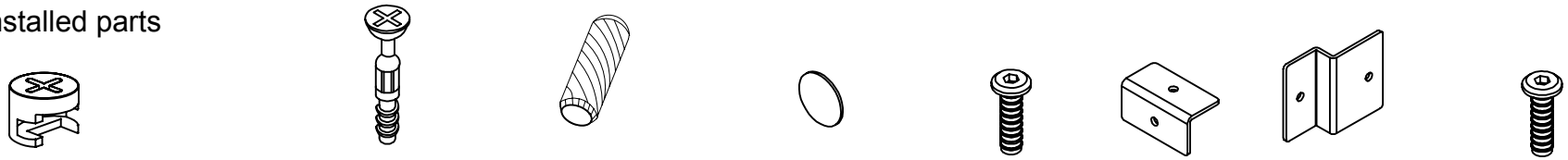

c5 Cam

c1 6*35 Cam Bolt-37

d1 8*30 Dowel Pin-26

c2 (⅞") Cam Cover-46

s1 6*12 Screw-12

p1 Bracket-2

p2 Bracket-4

s2 6*25 Screw-9

Officeworks
Big ideas. Lowest prices.
OLG

ANVIL RECEPTION COUNTER

Installation Guide

* To prevent possible scratches or damage, assemble the reception on a soft surface such as a blanket, carpet or packaging.

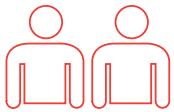

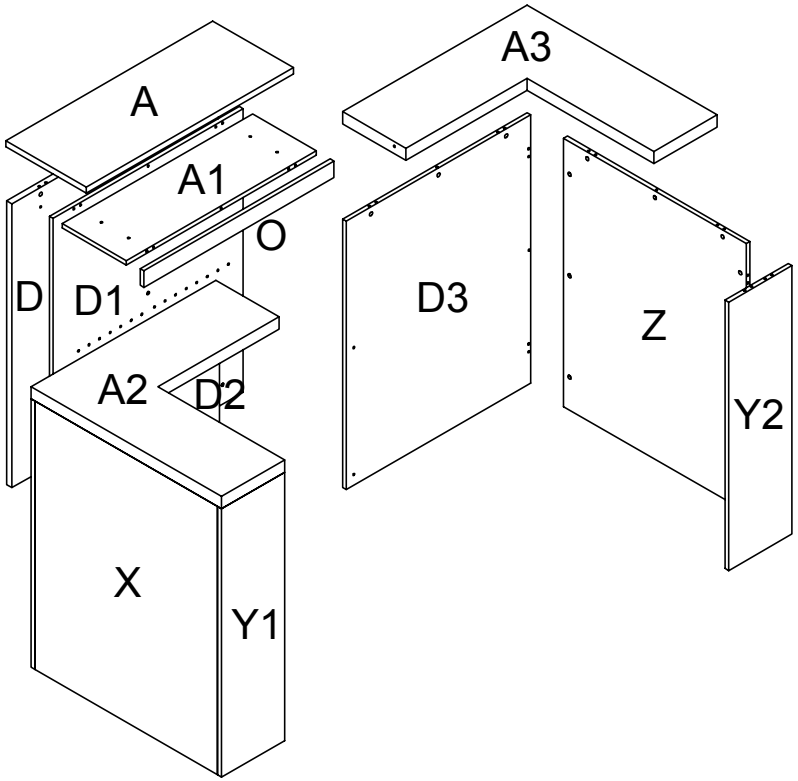

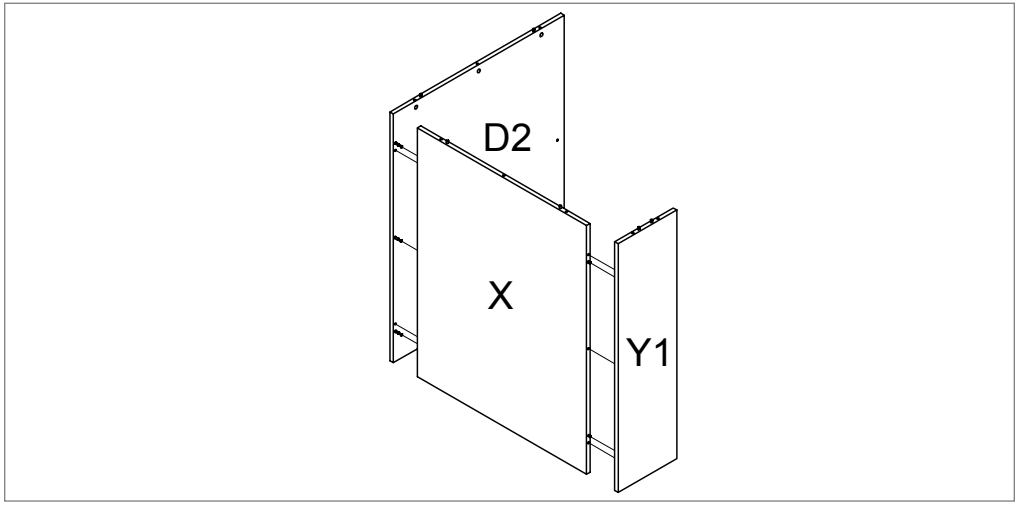

STEP 1

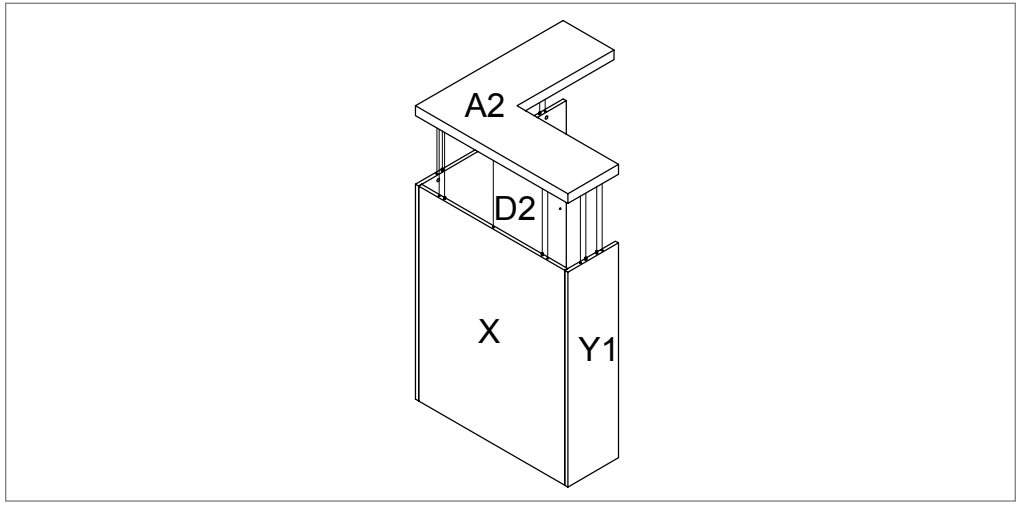

STEP 2

ANVIL RECEPTION COUNTER

Installation Guide

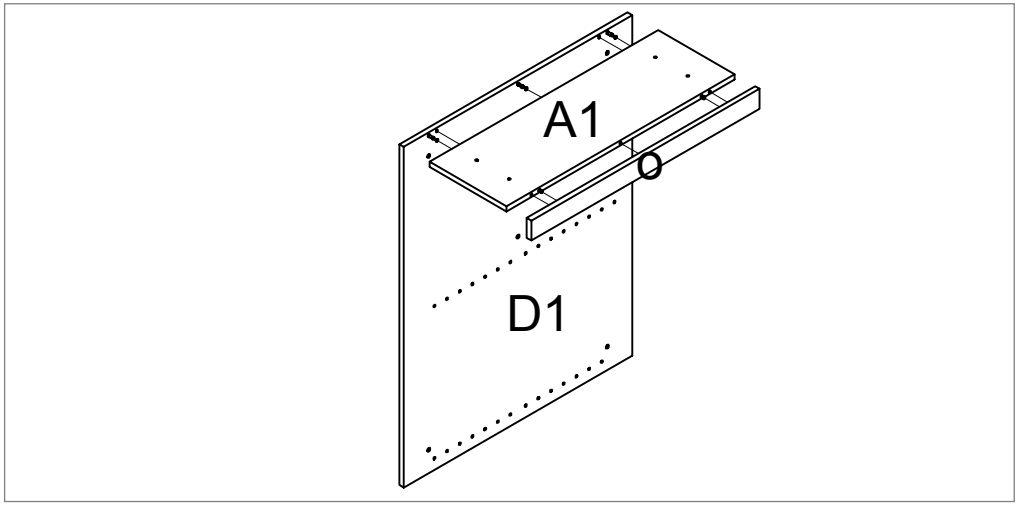

STEP 3

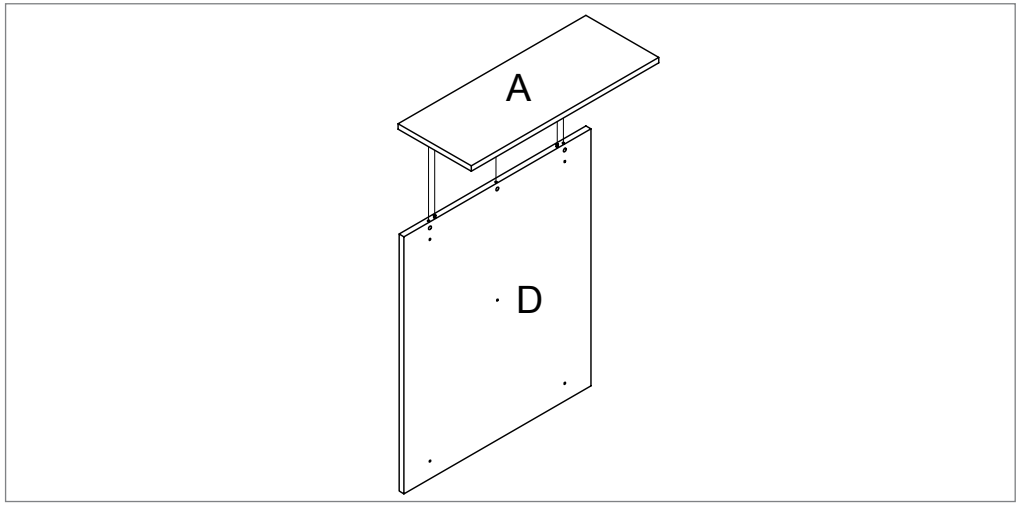

STEP 4

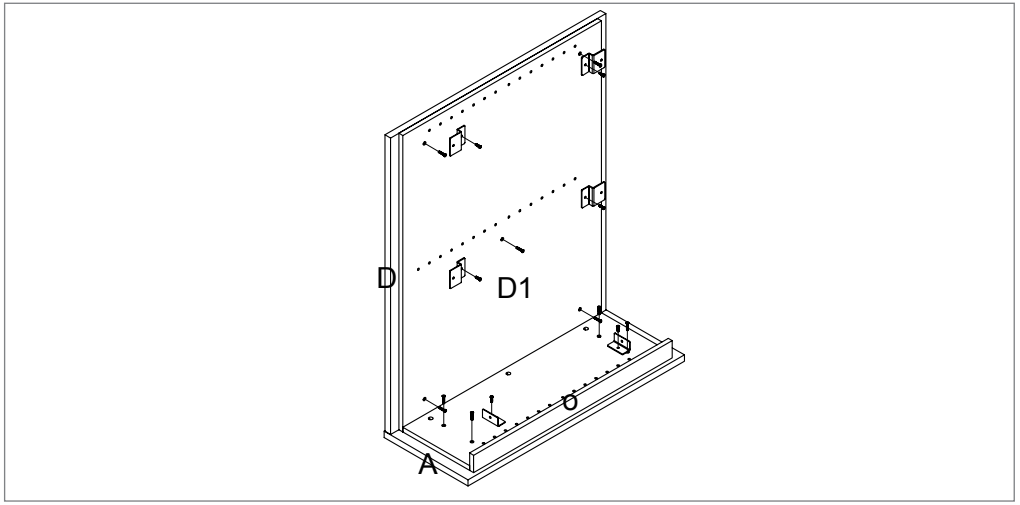

STEP 5

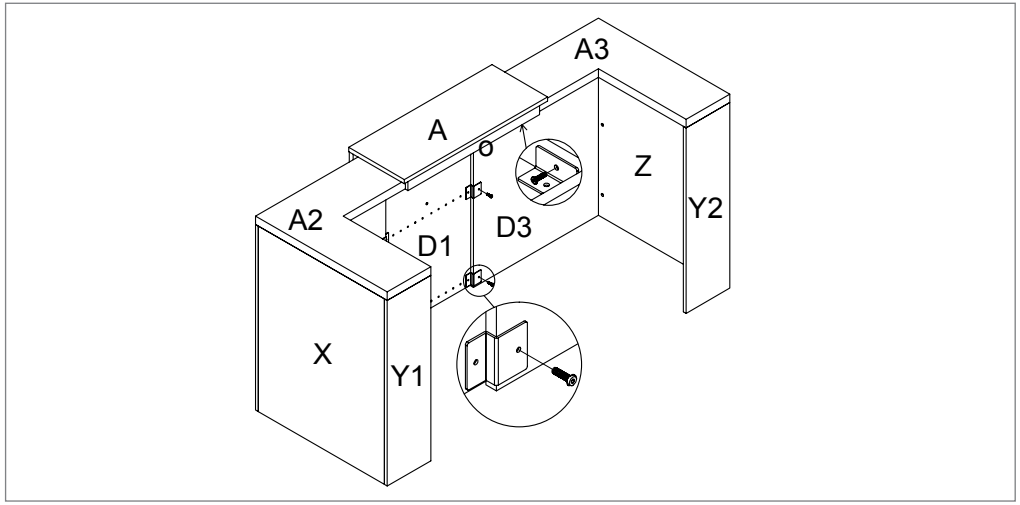

STEP 6